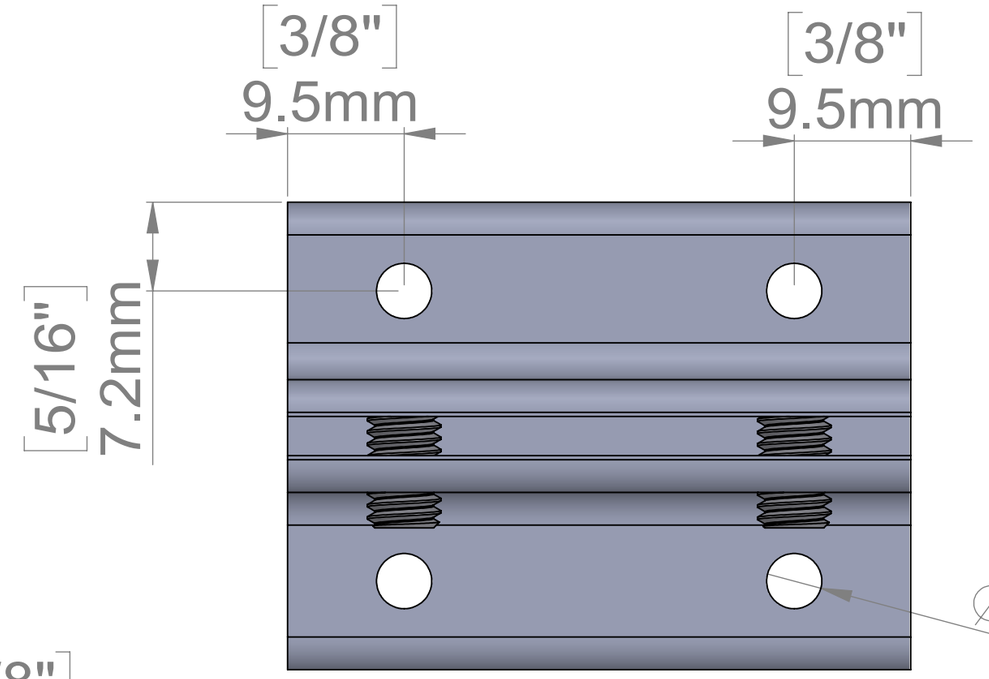

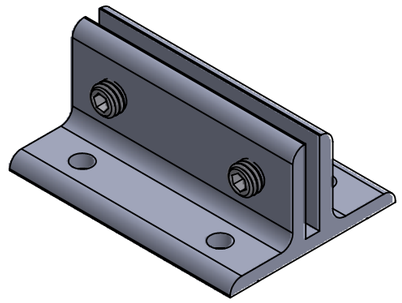

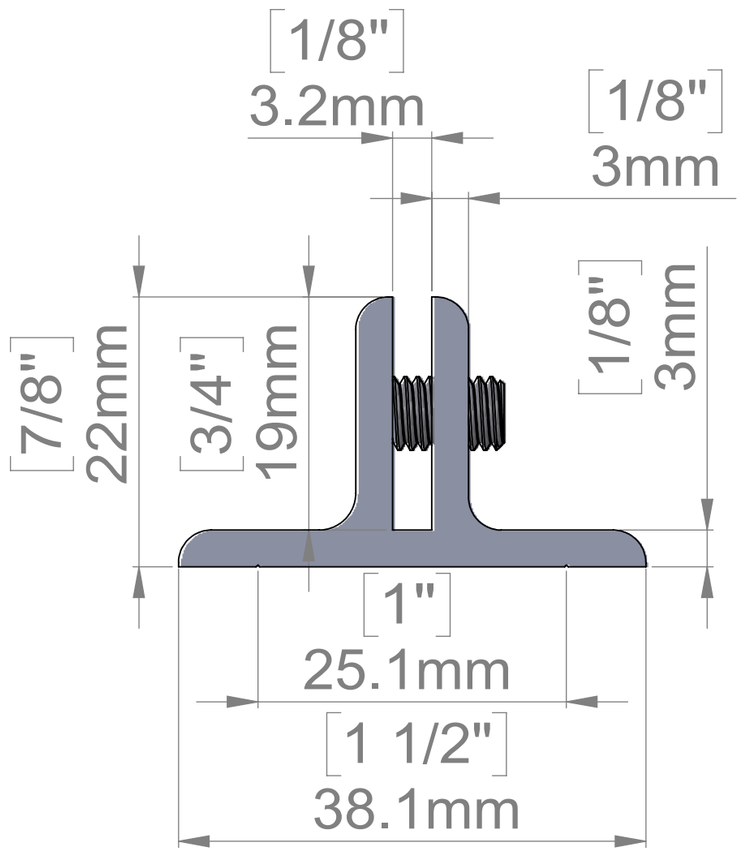

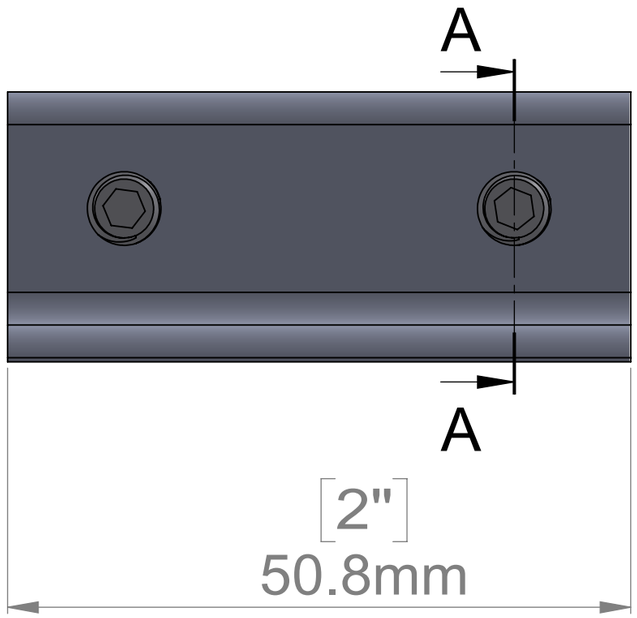

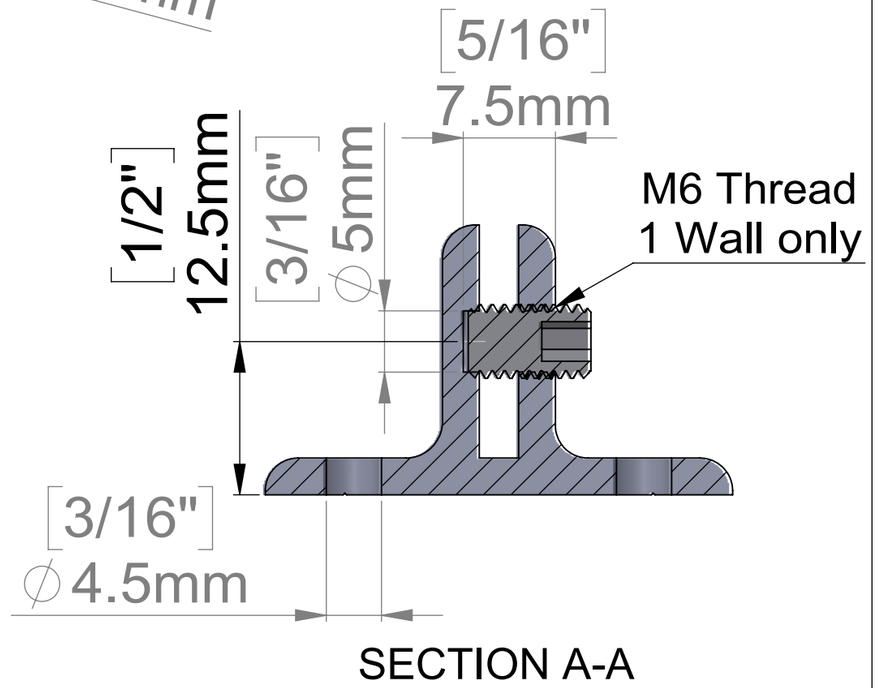

2 X M6x8mm set screw need to be install in the profile
2 X M6x4mm Set in clear bag (As Extra)
All Profile in Sealed clear sleeve with label

Title : ASB18-2		Scale : 1.5:1	Mbs R&D
		Sizes : Letter Landscape	Customer:
Mbs Standoffs 6420 Benjamin Rd Tampa, FL 33634 USA 813-938-6025	Material:	Finish	Qty : / Rep :
	N°programme laser	N°prog. Mécanum.	N° Plan : HRG3910

This document and the product mentioned in Reference are the exclusive property of MBS-Standoffs, they can not be used, reproduced, disclosed or disclosed without prior authorization