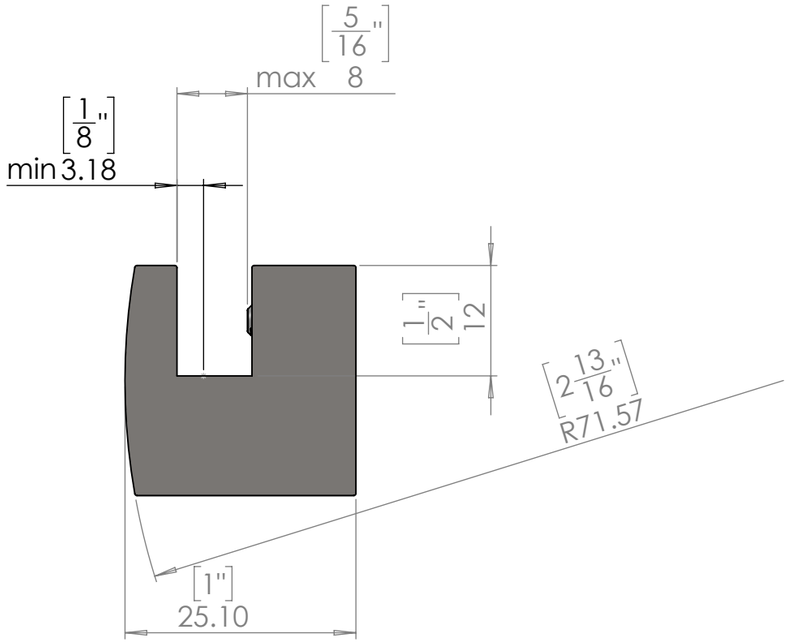

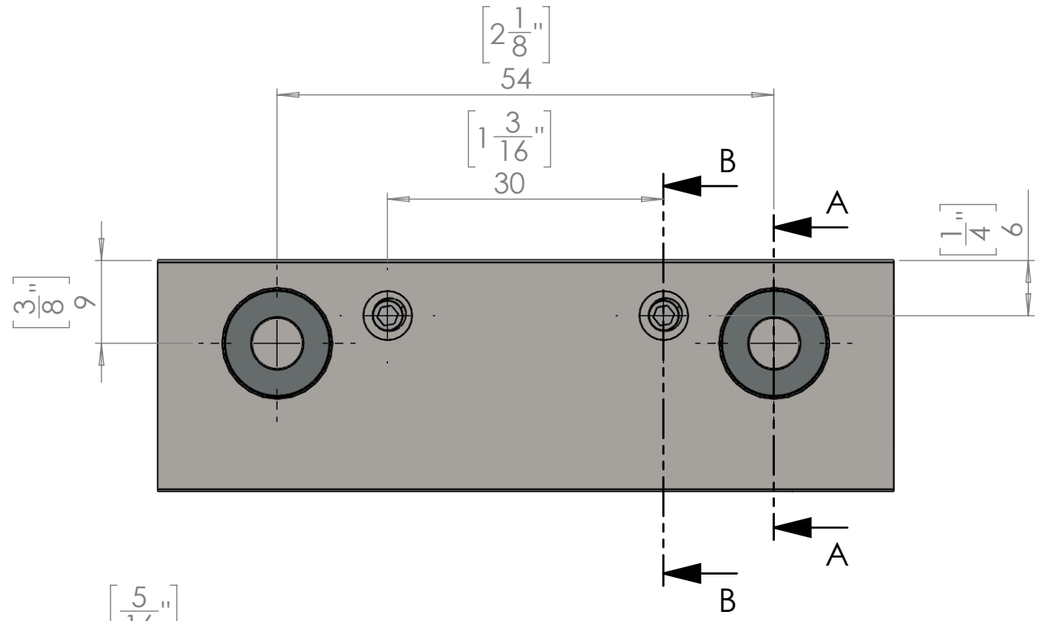

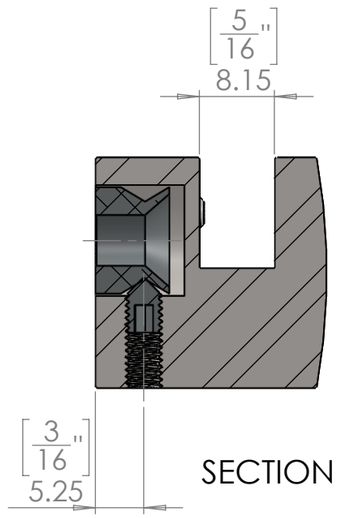

SECTION A-A

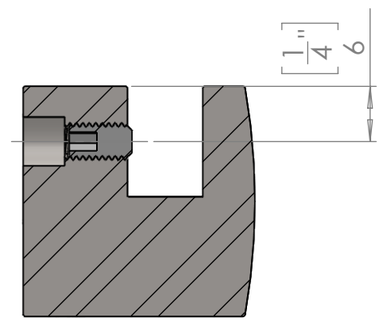

SECTION B-B

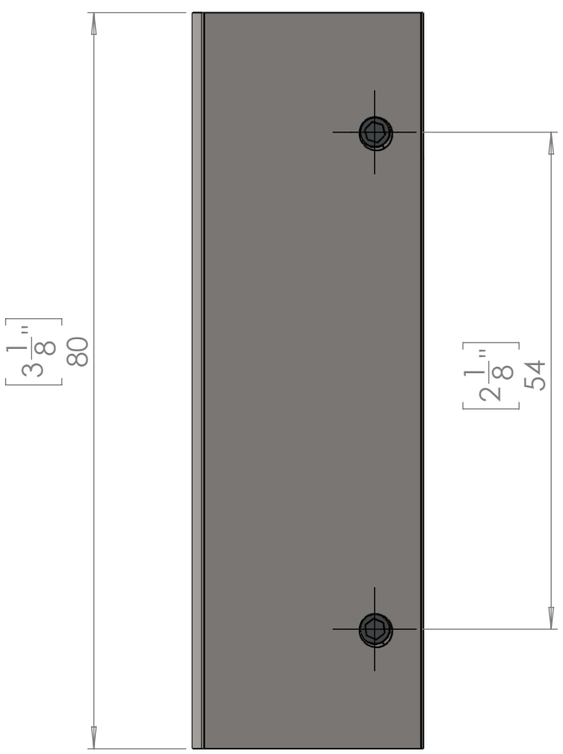

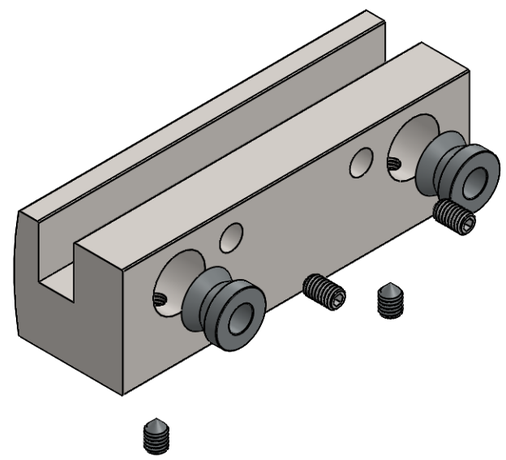

Title : R100-80		Scale : 2.5:1	Mbs R&D
		Sizes : Letter Landscape	Customer:
Mbs Standoffs 6420 Benjamin Rd Tampa, FL 33634 USA 813-938-6025	Material:	Finish	Qty : / Rep :
	N°programme laser	N°prog. Mécanum.	R100-80

This document and the product mentioned in Reference are the exclusive property of MBS-Standoffs, they can not be used, reproduced, disclosed or disclosed without prior authorization